Schutzvermerk nach DIN ISO 16016 beachten COPYRIGHT RESERVED DIN ISO 16016

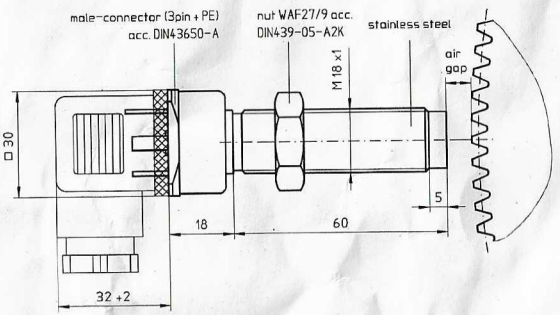

female connector is included in delivery

connection diagram

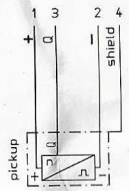

circuit diagram

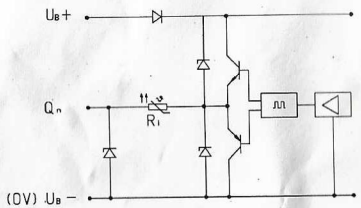

contact arrangement

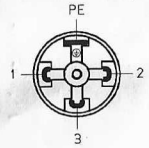

refer to documents:
- safety notes NAN-KD-0001
- data sheet DB-FA13
- instruction manual NAN-KD-0006

Rev.	Description	Date	Name
a	released	11.12.2017	JEI

Gen. Tolerance ISO 2768 - m K	Surface DIN ISO 1302
ISO 8015 note for assembly drawings variances is the sum of general tolerances	E
Technical Ref.	
Created by	J. Eisen
Approved by	J. Eisen
Responsible Dept.	R&D - NAN
Date of Issue	11.12.2017
Urspr.:	

NORIS.

Scale % 10mm

document part
Technical Details

Title, supplementary Title
Speed Sensor
Series: FAJ13... / Type FAJ13-0215-A

CAD-File: 42.113.121.MOD
Creation Date: 11.12.2017

Part No., Drawing No.
42.113.121.005.1

Document Type
DA
IEC 61955-1 / DIN EN 41955-1

Sheet 1 / 1

Document Status: Released
Rep. f.:

Data Field ISO 7200 / DIN EN ISO 7200